450W High Reliable True Sine Wave DC-AC Power Inverter NTS-450 series

DC input side

AC output side

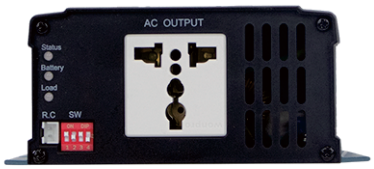

User's Manual

Video

IEC62368-1 BS EN/EN62368-1 TPTC004 AS/NZS 62368.1

Please refer to page3 for more details.

Household Railway Car Use Marine Network Telecom

Features

- Compact size and light weight
- True sine wave output (THD<3%)
- High surge power up to 900W
- Temperature controlled cooling fan
- AC output voltage and frequency selectable by DIP S.W
- No load disspation **<1.5W** max. at standby saving mode
- -25℃~+70℃ wide operating temperature
- Power ON-OFF remote control
- Front panel indicator for operation status
- Protections :
  Input : Reverse polarity / DC low alarm / DC low shutdown / Over voltage
  Output : Short circuit / Overload / Over temp.
- Battery over discharge protection(Low voltage disconnect)
- Suitable for lead-acid or li-ion batteries
- Carry handle accessory available(Order NO.: Carry handle, sold separately)
- Conformal coating
- 3 years warranty

Applications

- Mobile device
- Home and office appliance
- Power tools
- Portable equipment
- Vehicle
- Yacht
- Off-grid solar power system
- Wireless network
- Telecom or datacom system

GTIN CODE

MW Search: https://www.meanwell.com/serviceGTIN.aspx

Description

NTS-450 is a 450W highly reliable off-grid true sine wave DC-AC power inverter. Its key features include: digital design with MCU control, streamlined control circuitry that quickly responds to environmental changes and improves reliability, high quality fan with low acoustic noise, 900W peak power, adjustable AC output voltage and frequency, -25~+70℃ wide operating temperature range, complete protections features, and etc. combined with batteries, the NTS-450 is suitable for use in residential, commercial, marine, automobile, mine, construction site, and remote areas with no access to utility power, and the output can be used to power fans, TV, radio, phone charger, PC/laptop, lighting, electromechanical tool, communication equipment, power distribution cabinet, outdoor camping equipment, marine AC power, factory equipment, and etc.

Model Encoding

NTS - 450 - 1 12 US

- US: AC output socket (Type US, EU, CN, AU, UK, UN, GFCI outlet)
- 12: DC input voltage (12: 12Vdc, 24: 24Vdc, 48: 48Vdc)
- 1: AC output voltage (1: 100/110/115/120Vac, 2:200/220/230/240Vac)
- 450: Rated wattage
- NTS: Series name

SPECIFICATION

MODEL NO.			NTS-450-112□	NTS-450-124□	NTS-450-148□	NTS-450-212□	NTS-450-224□	NTS-450-248□
			□ = US, GFCI, UN			□= EU, CN, AU, UK, UN		
AC OUTPUT	RATED POWER(Continuous)		450W					
	OVER RATED POWER(3 Min.)		517.5W					
	PEAK POWER(10 Sec.)		675W					
	SURGE POWER(30 Cycles)		900W					
	AC VOLTAGE		Default setting set at 110VAC			Default setting set at 230VAC		
			100 / 110 / 115 / 120Vac selectable by DIP S.W			200 / 220 / 230 / 240Vac selectable by DIP S.W		
	FREQUENCY		Default setting set at 60Hz±0.1Hz			Default setting set at 50Hz±0.1Hz		
			50/60Hz selectable by DIP S.W			50/60Hz selectable by DIP S.W		
	WAVEFORM Note.1		True sine wave (THD<3%)					
	AC REGULATION		±3.0% at rated output voltage					
	FRONT PANEL LED		Please refer to page5					
DC INPUT	DC VOLTAGE		12V	24V	48V	12V	24V	48V
	VOLTAGE RANGE (Typ.)		10 ~ 16.5Vdc	20 ~ 33Vdc	40 ~ 66Vdc	10 ~ 16.5Vdc	20 ~ 33Vdc	40 ~ 66Vdc
	DC CURRENT (Typ.)		50A	25A	14A	50A	25A	14A
	NO LOAD DISSIPATION (Typ.)	NON-SAVING MODE	10W	10W	12W	10W	10W	12W
		SAVING MODE	Default disable, ≦1.2W ~ 1.5W by models @ auto detec AC output load ≦10W will be changed to saving mode					
			1.2W	1.3W	1.5W	1.2W	1.3W	1.5W
	OFF MODE CURRENT DRAW		≦1mA					
	EFFICIENCY (Typ.) Note.1		88%	91%	91%	90%	93%	93%
	BATTERY TYPES		Lead Acid or li-ion					
PROTECTION / DC INPUT	FUSE (Internal)		40A*2	40A*1	10A*2	40A*2	40A*1	10A*2
	LOW	ALARM	11±0.3Vdc	22±0.5Vdc	44±1Vdc	11±0.3Vdc	22±0.5Vdc	44±1Vdc
		SHUTDOWN	10±0.3Vdc	20±0.5Vdc	40±1Vdc	10±0.3Vdc	20±0.5Vdc	40±1Vdc
		RESTART	12.5±0.3Vdc	25±0.5Vdc	50±1Vdc	12.5±0.3Vdc	25±0.5Vdc	50±1Vdc
	HIGH	ALARM	15.5±0.3Vdc	31±0.5Vdc	62±1Vdc	15.5±0.3Vdc	31±0.5Vdc	62±1Vdc
		SHUTDOWN	16.5±0.3Vdc	33±0.5Vdc	66±1Vdc	16.5±0.3Vdc	33±0.5Vdc	66±1Vdc
		RESTART	15±0.3Vdc	30±0.5Vdc	60±1Vdc	15±0.3Vdc	30±0.5Vdc	60±1Vdc
	BAT. POLARITY		By internal fuse open					
PROTECTION / AC OUTPUT	OVER TEMPERATURE		Protection type : Shut down o/p voltage, re-power on to recover					
	OUTPUT SHORT		Protection type : Shut down o/p voltage, re-power on to recover					
	OVER LOAD (Typ.)		105 ~ 115% load for 180 sec., 115% ~ 150% load for 10 sec.					
			Protection type : Shut down o/p voltage, re-power on to recover					
	GFCI PROCTECTION		Design refer to UL458 (Only for "GFCI" AC socket , by request)		None			
FUNCTION	REMOTE CONTROL		Power ON-OFF remote control by front panel dry contact connector (by RELAY); Open : Normal work ; Short , Remote off					
ENVIRONMENT	WORKING TEMP.		-25 ~ +70℃(Refer to "Derating curve")					
	WORKING HUMIDITY		20% ~ 90% RH non-condensing					
	STORAGE TEMP., HUMIDITY		-30 ~ +70℃ / -22 ~ +158°F, 10 ~ 95% RH non-condensing					
	VIBRATION		10 ~ 500Hz, 3G 10min./1cycle, 60min. each along X, Y, Z axes					
SAFETY & EMC (Note.4)	SAFETY STANDARDS		CB IEC62368-1,Dekra BS EN/EN62368-1,E13,EAC TP TC 004 approved;Design refer to AS/NZS 62368.1 (Please refer to next page"AC output socket" table for more details) ; Design refer to UL458 (By request)					
	WITHSTAND VOLTAGE		DC I/P - AC O/P:3.0KVac AC O/P - FG:1.5KVac					
	EMC EMISSION		Parameter	Standard			Test Level / Note	
			Radiated	FCC for 112,124,148 only(expect for Type-UN)			Class A	
				BS EN/EN55032(CISPR32) for 212,224,248 only(expect for Type-UN)			Class A	
			Harmonic Current	BS EN/EN61000-3-2			-----	
			Voltage Flicker	BS EN/EN61000-3-3			-----	
	EMC IMMUNITY		BS EN/EN55024, BS EN/EN55035					
			Parameter	Standard			Test Level / Note	
			ESD	BS EN/EN61000-4-2			Level 3, 8KV air ; Level 2, 4KV contact	
			Radiated	BS EN/EN61000-4-3			Level 2 , 3V/m	
			Magnetic Field	BS EN/EN61000-4-8			Level 1 , 1A/m	
OTHERS	MTBF		843.9K hrs min. Telcordia TR/SR-332 (Bellcore) ; 85K hrs min. MIL-HDBK-217F (25℃)					
	DIMENSION		210*130*55mm (L*W*H)					
	PACKING		1.3Kg; 8pcs/ 11.4Kg/ 1.74CUFT					

NOTE

1.Efficiency, AC regulation and THD are tested by 450W, linear load at 12.5Vdc/25Vdc/50Vdc input voltage.
2.All parameters not specified above are measured at rated load, 25℃ of ambient temperature and set to factory setting.
3.Internal pre-start circuit, the setup time is 8s.
4.The power supply is considered as an independent unit, but the final equipment still need to re-confirm that the whole system complies with the EMC directives. For guidance on how to perform these EMC tests, please refer to "EMI testing of component power supplies." (as available on https://www.meanwell.com//Upload/PDF/EMI_statement_en.pdf)

※ Product Liability Disclaimer：For detailed information, please refer to https://www.meanwell.com/serviceDisclaimer.aspx

■ AC Output Socket

MODEL NO.	NTS-450-112□	NTS-450-124□	NTS-450-148□	NTS-450-212□		NTS-450-224□		NTS-450-248□
Socket type	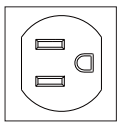	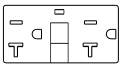		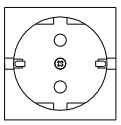	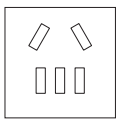	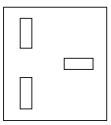	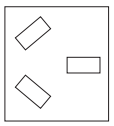	
	TYPE-US	TYPE-GFCI	TYPE-UN	TYPE-EU	TYPE-CN	TYPE-UK	TYPE-AU	TYPE-UN
	In Stock	By request	In Stock	In Stock	In Stock	By request	By request	In Stock
Country	USA	USA	UNIVERSAL	EUROPE	CHINA	U.K	AUSTRALIA	UNIVERSAL
Certificate	CB FC DEKRA	CB FC	None	CB E13 DEKRA EAC CE UKCA			CB E13 DEKRA EAC CE UKCA	E13 EAC

■ DERATING CURVE

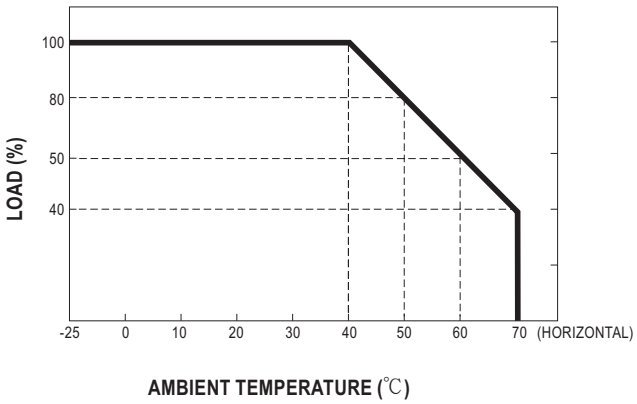

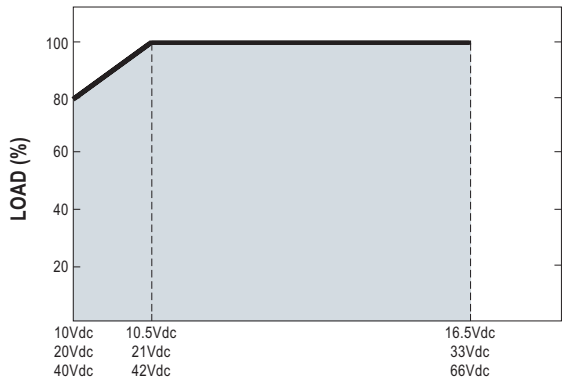

■ Remote ON-OFF Control

Remote ON-OFF	AC Output Status
Open	power inverter ON
Short	power inverter OFF

■ AC Output Voltage、Frequency、Power saving mode selectable by DIP SW

Output voltage and frequency setting factory settings are either 110Vac/60Hz or 230Vac/50Hz, users are able to adjust the voltage and frequency, through the DIP switch of position 1,2,3,4 on the panel.

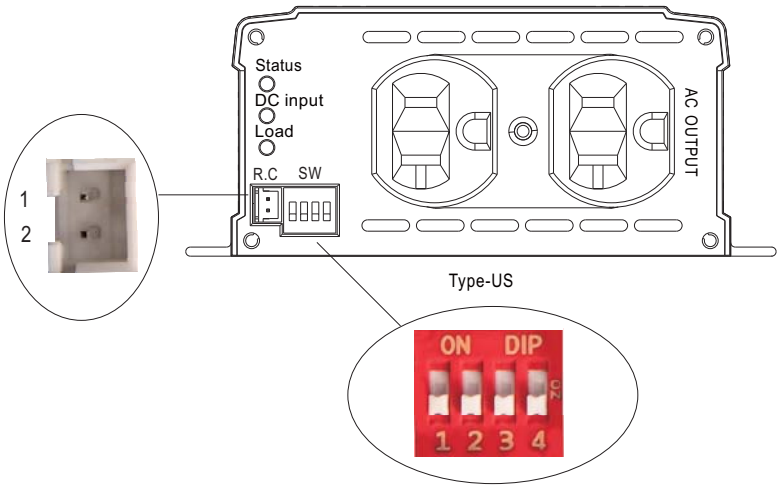

AC Output Voltage、 Frequency、Power saving mode selectable by DIP SW			
SW1	SW2	SW3	SW4
OFF	OFF : 100Vac or 200Vac	ON : 50Hz	ON : Saving mode
OFF	ON : 110Vac or 220Vac		
ON	OFF : 115Vac or 230Vac	OFF: 60Hz	OFF: Non-Saving mode
ON	ON : 120Vac or 240Vac		

■ LED STATUS

Normal work:

	Green	Orange	Red
Status	System check Inverter OK	Remote off Saving mode	Abnormal Status (See below table)

	Green	Orange	Red
DC Input	12.5~15.5Vdc 25~31Vdc 50~62Vdc	11~12.5Vdc 22~25Vdc 44~50Vdc	<11Vdc or >15.5Vdc <22Vdc or >31Vdc <44Vdc or >62Vdc

	Green	Orange	Red
Load	<40% load	40~80% load	>80% load

Abnormal status :

LED Indicator	Abnormal Indication
Status ● **DC Input** ○ **Load** ☀	Output overload or AC output short circuit
Status ● **DC Input** ☀ **Load** ○	Abnormal DC voltage
Status ● **DC Input** ☀ **Load** ☀	Over temperature or Fan lock
Status ☀ **DC Input** ○ **Load** ○	Inverter fail

● Light
○ Light off
☀ Flash

■ MECHANICAL SPECIFICATION

Unit:mm

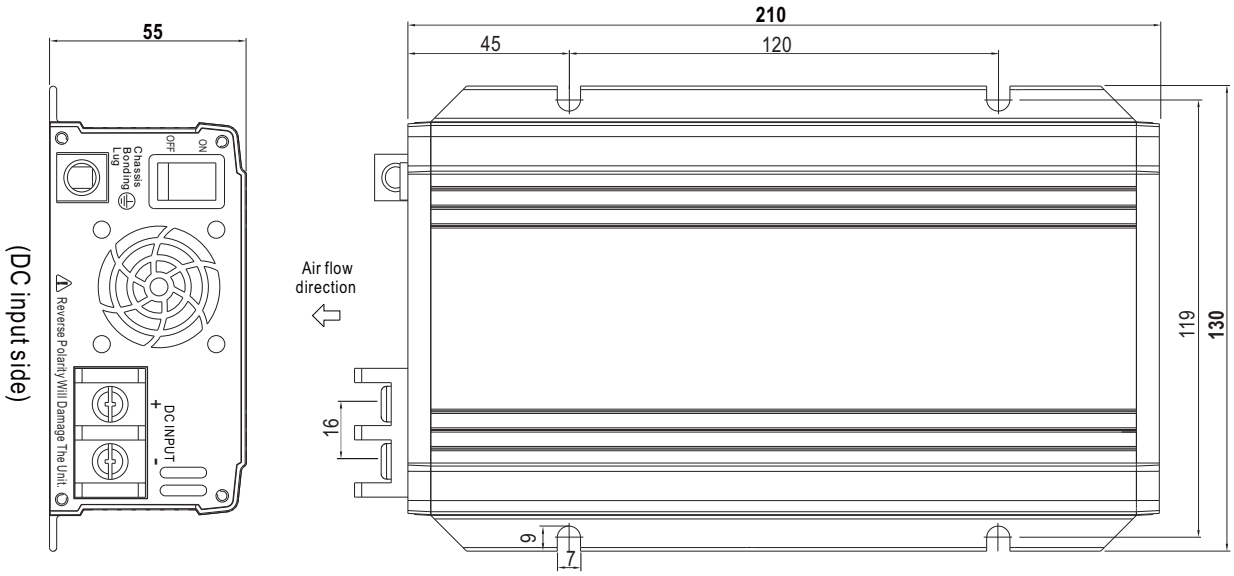

(DC input side)

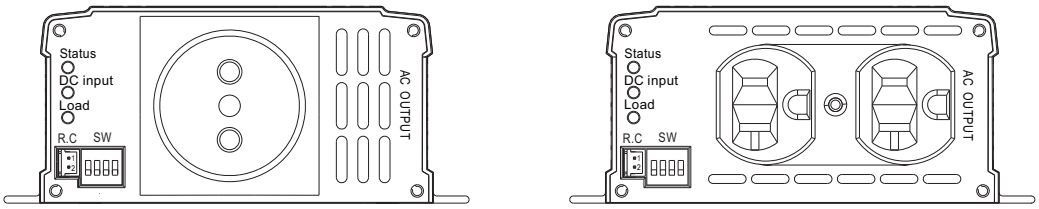

Type-EU

Type-US

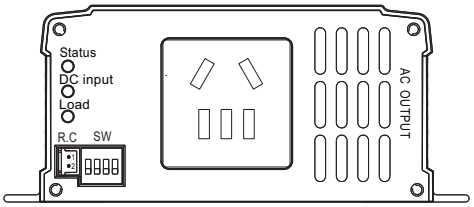

Type-CN

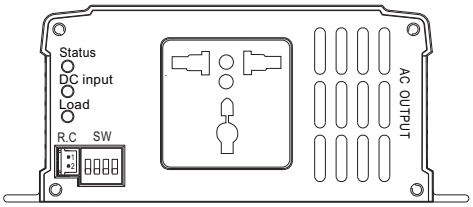

Type-UN

(AC output side)

R.C Connector : JST B-XH or equivalent

Remote Control	Mating Housing	Terminal
Pin 1,2 Open: Normal work	JST XHP or equivalent	JST SXH-001T or equivalent
Pin 1,2 Short: Remote off		

■ Accessory List

※ Carry handle (Optional accessory, Power inverter and Pull handle should ordered seperately)

MW's Order No.		Item	Quantity
Carry Handle	①	Handle 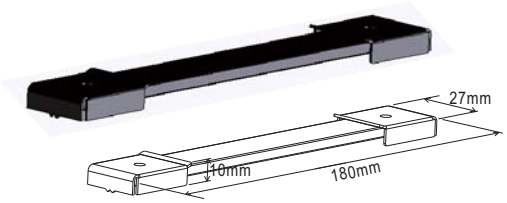	1
	②	Foot pad	4
	③	Screw	2

① Handle

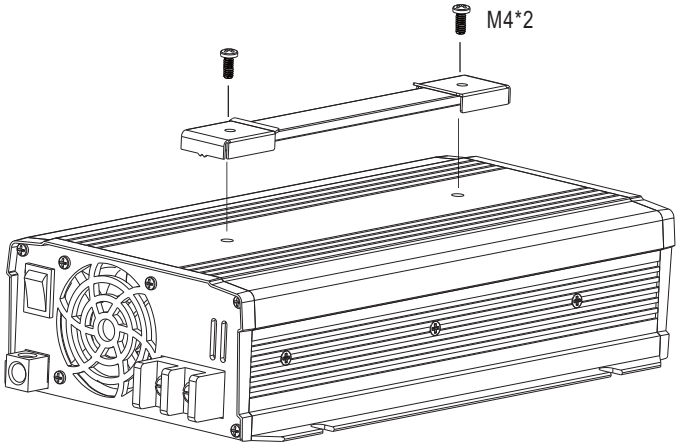

② Foot pad

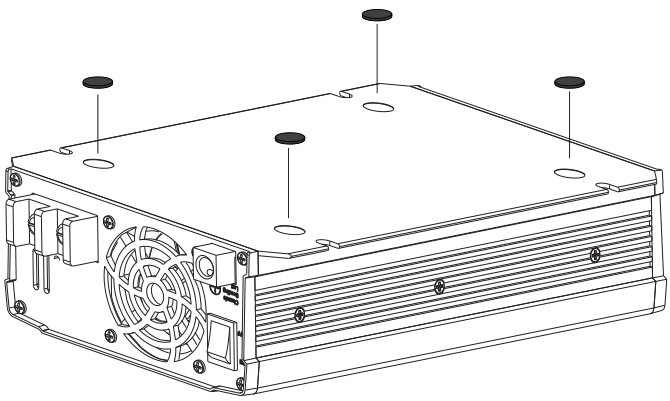

■ TYPICAL APPLICATION

1. Battery Bank
2. Off-Grid DC/AC Solar Inverter (NTS series)
3. AC Outlet

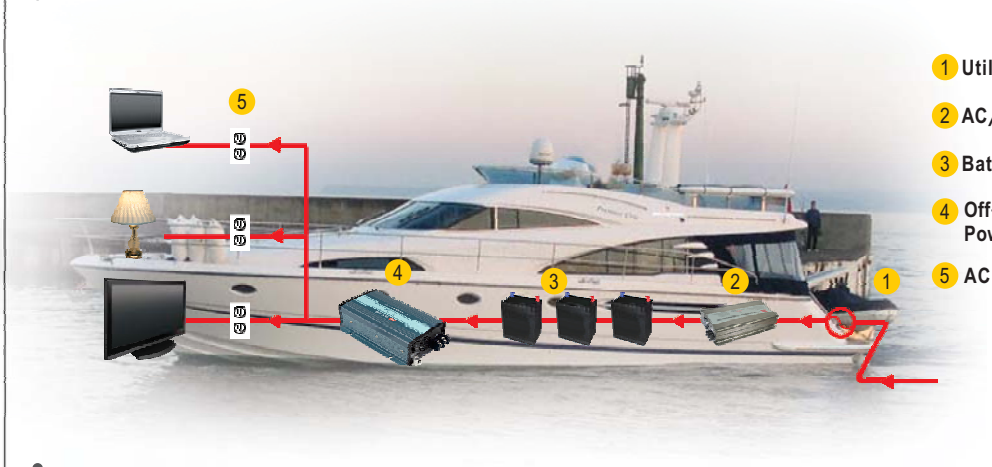

1. Utility Input (Shore)
2. AC/DC Battery Charger (PB/NPB/NPP series)
3. Battery Bank
4. Off-Grid DC/AC Power Inverter (NTS series)
5. AC Outlet

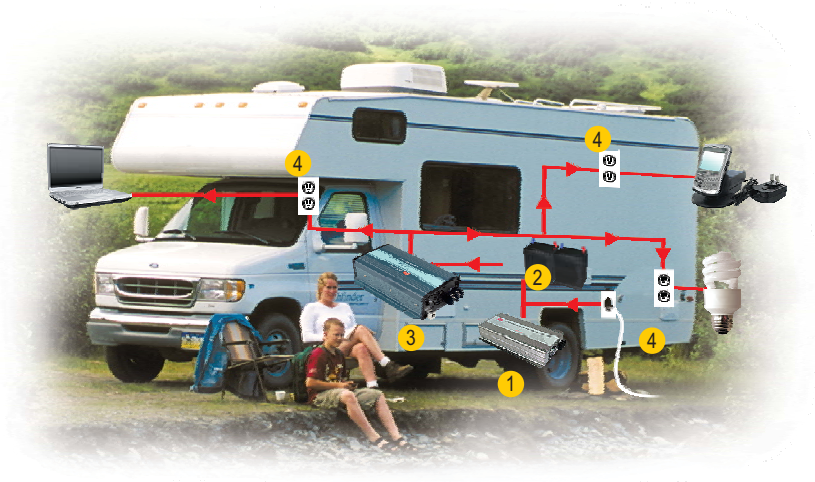

1. AC/DC Battery Charger (PB/NPB/NPP series)
2. Battery Bank
3. Off-Grid DC/AC Inverter (NTS series)
4. AC Outlet

■ INSTALLATION MANUAL

Please refer to : http://www.meanwell.com/manual.html